Advertising Agreement for Canberra Doctor 2026

Advertiser:

AMA Member Name:

Mailing Address:

Contact Name:

Phone: Fax:

Email:

Advertising Options (Tick one box only)

AMA Member

- ☐ AMA Member discount - Single advertisement (15% discount applies)
- ☐ AMA Member discount - 6 Editions - paid monthly (20% discount applies)
- ☐ For special arrangements by negotiation, contact AMA (ACT) direct by calling (02) 6270 5410

Non-Members

- ☐ Non-Members – no discount applies (single advertisement)
- ☐ Non-Members – 6 Editions – paid monthly (10% discount applies)
- ☐ For special arrangements by negotiation, contact AMA (ACT) direct by calling (02) 6270 5410

Artwork Options (Tick one box only)

- ☐ I will supply new print-ready artwork
- ☐ Please use existing artwork on file, previously provided
- ☐ Please design new ad (I will supply images and text)

Note: Initial design and layout included in cost of advert - includes 1 PDF proof and 1 final artwork. Subsequent changes may be charged at $50 per change.

- ☐ Please design new ad (AMA will create images and text)

Dates (Tick all that apply):

Please note that the following dates may be subject to change. Please contact us to confirm the most up-to-date schedule.

Booking and ad material (images, copy if applicable) to be received **by close of business** on the following dates:

Required (tick)	Issue Number	Ad booking deadline	Ad material deadline	Publication (subject to change)
☐	Issue 1	28/1/26	11/2/26	Feb/March: Wed 25 Feb
☐	Issue 2	25/3/26	8/4/26	April/May: Wed 22 April
☐	Issue 3	27/5/26	10/6/26	June/July: Wed 24 June
☐	Issue 4	29/7/26	12/8/26	Aug/Sept: Wed 26 Aug
☐	Issue 5	30/9/26	14/10/26	Oct/Nov: Wed 28 Oct
☐	Issue 6	10/11/26	24/11/26	Dec/Jan: Tues 8 Dec

Select ad type/size

PRICING per advertisement: (*all prices are GST inclusive) Placement and artwork/design as requested. Prices are the total amount to be paid, inclusive of discount.*

General News

Size	Non Member x1	Non Member x6 10% Discount	Member x1 15% Discount	Member x6 20% Discount
Front page strip (250mm x 80mm)	☐ $1,650.00	☐ $8,900.00	☐ $1,405.00	☐ $7,910.00
1/4 page strip (250mm x 80mm)	☐ $1,325.00	☐ $7,155.00	☐ $1,130.00	☐ $6,355.00
1/2 page strip (250mm x 120mm)	☐ $2,095.00	☐ $11,310.00	☐ $1,785.00	☐ $10,045.00
Full page (275mm x 325mm)	☐ $4,365.00	☐ $23,550.00	☐ $3,710.00	☐ $20,935.00

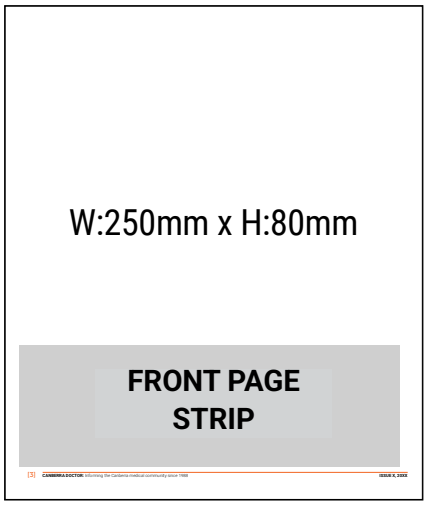

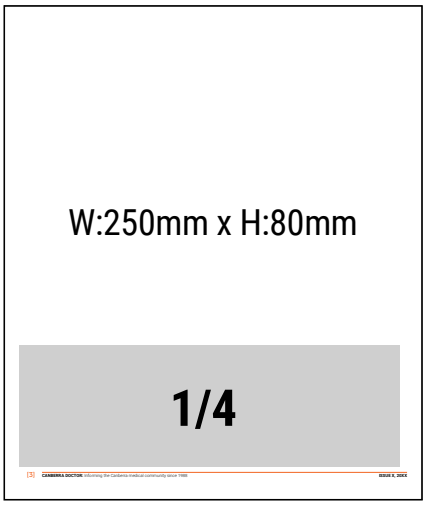

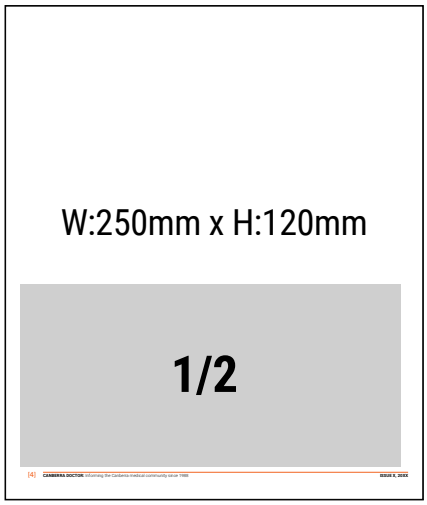

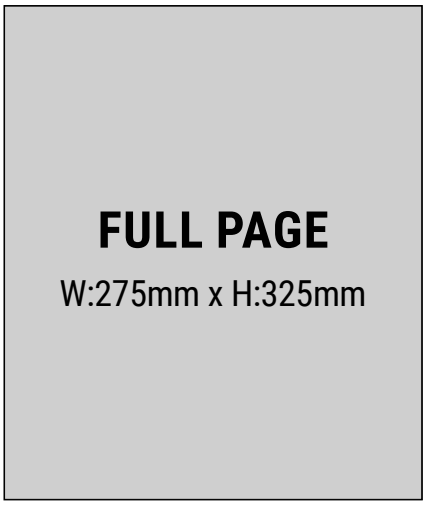

Select ad type/size

PRICING per advertisement: (*all prices are GST inclusive) Placement and artwork/design as requested. Prices are the total amount to be paid, inclusive of discount.*

Classifieds

Size	Non Member x1	Non Member x6 10% Discount	Member x1 15% Discount	Member x6 20% Discount
Long (97mm x 43.5mm)	☐ $280.00	☐ $1,500.00	☐ $240.00	☐ $1330.00
Tall (46mm x 92mm)	☐ $280.00	☐ $1,500.00	☐ $240.00	☐ $1,330.00
Square (97mm x 92mm)	☐ $550.00	☐ $2,970.00	☐ $470.00	☐ $2,635.00
Wide (148mm x 92mm)	☐ $1,260.00	☐ $6,310.00	☐ $1,070.00	☐ $6,035.00

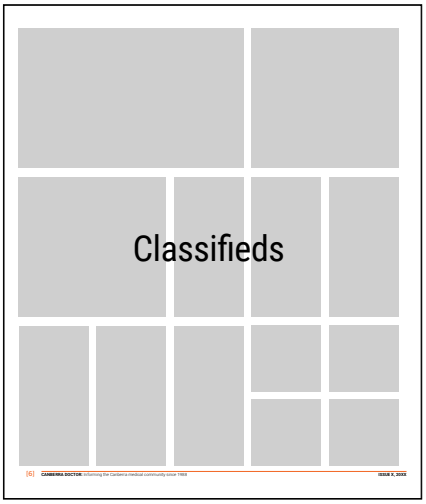

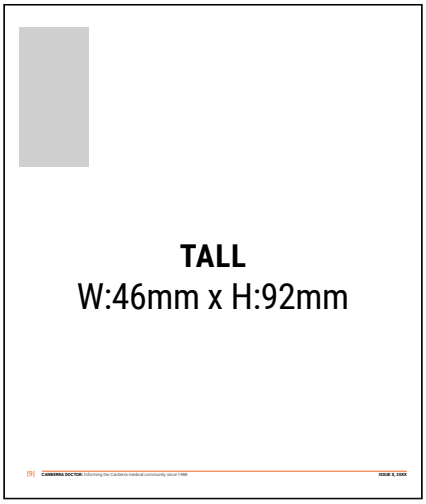

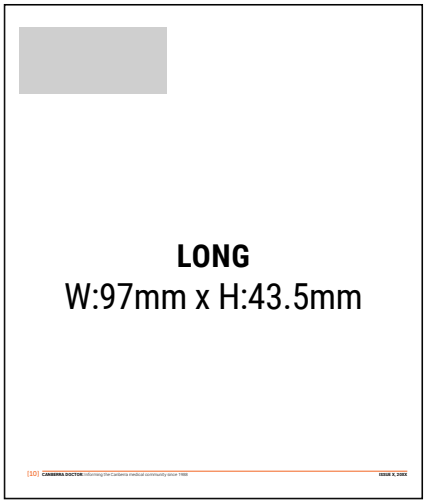

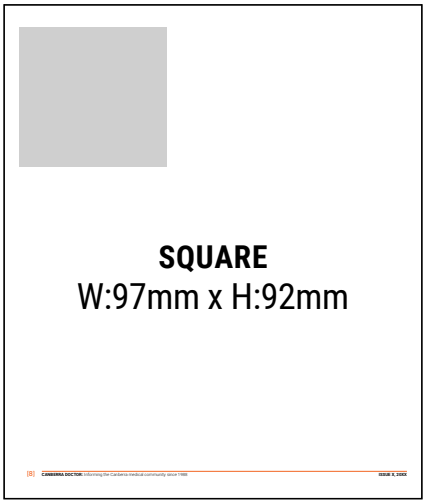

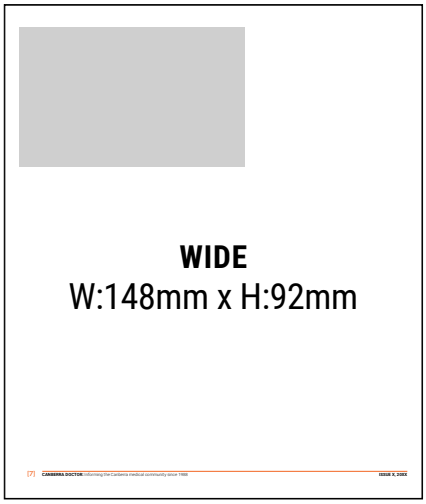

Terms and Conditions

Please read and sign below:

- 2026 prices may be subject to change.
- All prices are GST inclusive.
- Invoicing for single advertisements will be sent following publication.
- Pre-purchased advertising bookings will be invoiced following publication.
- Payment of accounts within 30 days from invoice date.
- Where an advertisement requires design, a proof in PDF format will be sent by email for review prior to printing. This normally occurs in the week prior to publication.
- Initial design and layout included in cost of advert. There is no charge for one change. Subsequent changes may be charged at $50 per change.
- Cancellation fee of 100% of advert cost for less than 21 days' notice to withdraw an advert may apply.
- AMA (ACT) reserves the right to vary the number and timing of editions.
- All advertising is subject to the discretion of the editor and publications committee. AMA (ACT) reserves the right not to accept a proposed advertisement.
- If an advertiser fails to provide new material by the deadline, previously provided advertising material will be repeated.
- Packages are available on request, discounts applied to packages are subject to the volume of the booking.
- Advertising options outside the opportunities mentioned in this document are POA and may have unique deadlines and terms.

PRINTED ARTWORK SPECIFICATIONS

- Must be supplied as high resolution PDF files in CMYK colour mode with no RGB, spot or PMS colours.
- All images must be high-resolution (at least 300dpi @ 100%), converted to CMYK colour mode and embedded within the PDF.
- No responsibility will be taken for print colour and quality reproduction if these specifications are not met.
- All fonts must be embedded in the PDF or converted to outlines.
- Double page and full page ads require no crop marks, 5mm bleed and 10mm margin.
- No type (font) should be smaller than 6 points.

DISCLAIMER

- While AMA ACT will do all possible to ensure advertising material is reproduced as intended, the responsibility is firmly with the client/advertiser to supply advertising material according to our specifications.

I agree to the above terms and conditions:

_____ _____

(Signature) *(Date)*